FLUID CONTROL ACCESS LAT BEQ

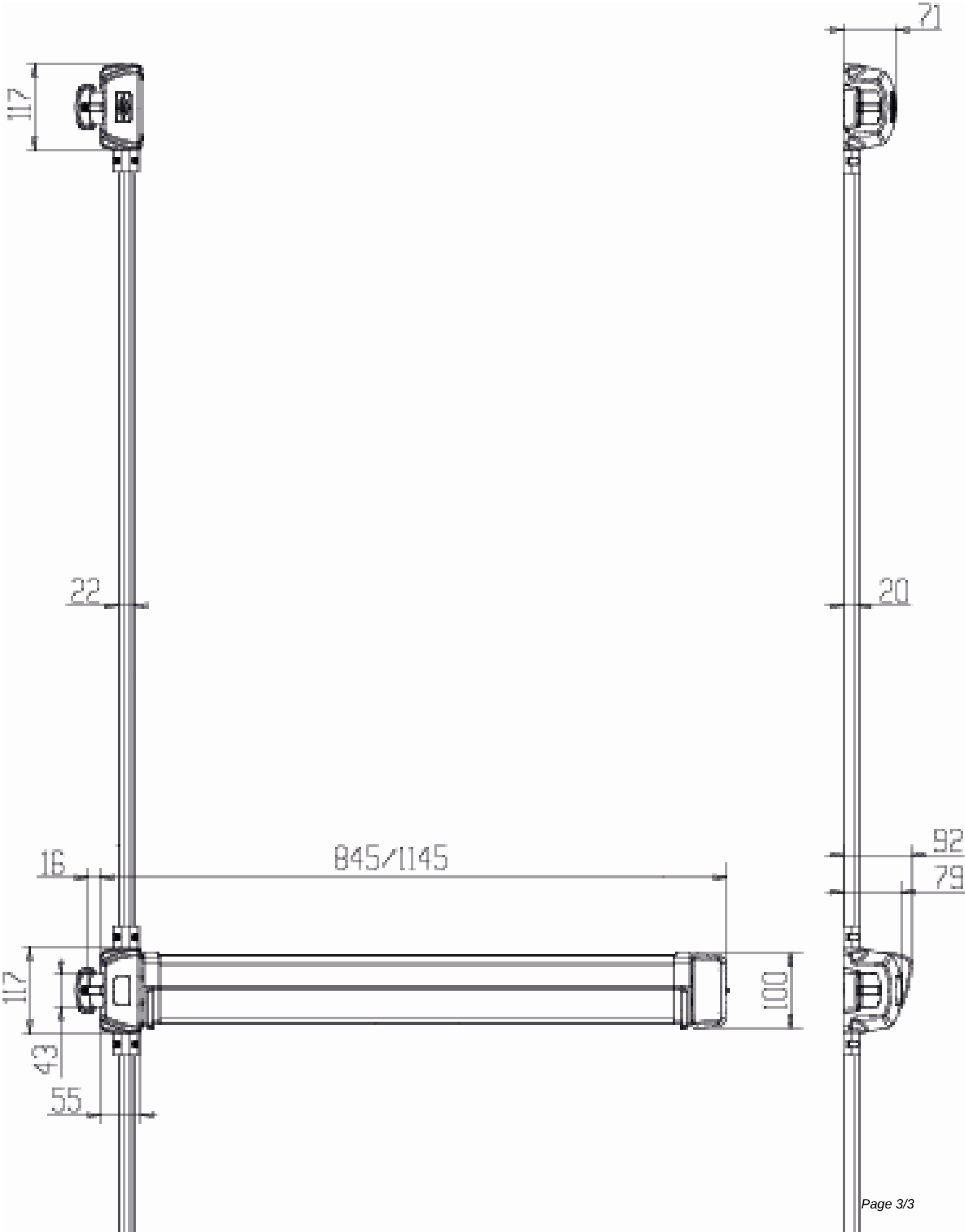
71
117
22
20
92
79
16
845/1145
117
100
43
55